AXIS

COMMERCIAL AUDITORIUM & THEATRE SEATING

Axis is a commercial **auditorium and lecture theatre chair** designed for universities, theatres, conference venues, cinemas and other high-traffic public spaces. Built around a durable steel structure and moulded components, **Axis** combines ergonomic comfort with a clean, contemporary profile suited to fixed seating installations.

Designed for extended seating, Axis features high-density cold-moulded PU foam in both the seat and back, providing consistent support and resilience. Its spring recovery mechanism allows the seat cushion to return smoothly to its original position after use, helping maintain an organised and efficient seating layout.

Performance & Design

- Commercial-grade auditorium and lecture seating
- Cold-moulded PU foam for lasting comfort
- Durable PP seat and back shells
- Reinforced metal base construction
- Plywood side panels with wood-finish armrests
- Integrated writing table
- Smooth, spring-assisted seat recovery

Axis is suitable for **universities, lecture theatres, cinemas, conference venues, theatres and educational spaces** where durability, comfort and efficient fixed seating are essential.

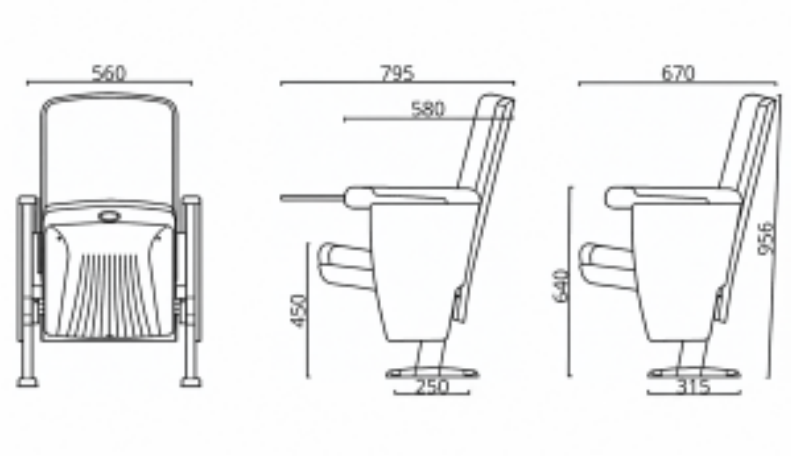

SKU: N/A | **Categories:** Auditorium |

GALLERY IMAGES

PRODUCT DESCRIPTION

UPHOLSTERY OPTIONS

Commercial Upholstery & Fabric Options for Auditorium Seating

Choose durable commercial fabrics for theatres, lecture halls and performing arts venues. Download the upholstery guide or request samples.

Download Upholstery Options (PDF)

Typical lead time: **12 weeks** depending on fabric, quantity and project timing. Send your seating schedule and we'll confirm availability and compliance.

Durability ratings
Cleaning & maintenance
Colour matching
Compliance checks
Sample requests
Lead time planning

Choosing the right commercial fabric

Best for: theatres, lecture halls, performing arts venues and education facilities

Key checks: abrasion rating, pilling, colour fastness and cleaning method

High traffic: prioritise commercial-grade upholstery with proven performance

Maintenance: match fabric choice to cleaning routine and servicing access

Colour & finish: select tones that work under low light and stage lighting

Documentation: data sheets, tender notes and samples can be provided

---

Need confirmation? Share your venue type, schedule and fabric preference and we'll confirm suitability.

Check suitability

AUDITORIUM SEATING UPHOLSTERY, SPECIFICATION & LONG-TERM SUPPORT

We supply **commercial auditorium seating** nationally across Australia for theatres, lecture halls, performing arts centres, education facilities and civic venues. Upholstery can be specified for high-traffic use and selected to meet project requirements for durability, maintenance and performance.

Need help with documentation? We provide **CAD support**, layout assistance and specification notes for tender packs. If your project includes public waiting or terminal areas, see our public seating systems and beam seating ranges. For samples, drawings or a quotation, contact our team.

We also offer **servicing for long-term use**, including inspections, parts replacement and **re-upholstery** to extend the life of your seating.

RECENT AUDITORIUM SEATING PROJECTS

Installed auditorium and public seating projects across Australia. Use these as references for layout, upholstery, aisle lighting and numbering.

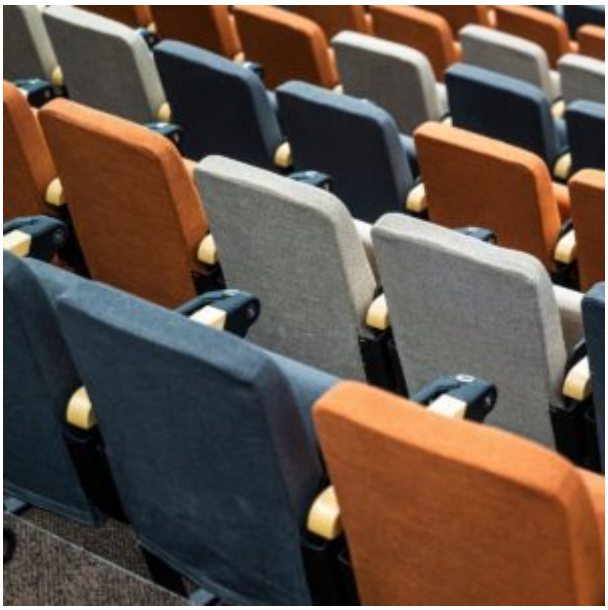

Cannon Hill Anglican College

Auditorium, Education

RELATED GUIDES & INSIGHTS

Specification tips, upholstery selection and layout support for auditoriums and lecture theatres.

Auditorium Seating for Education Spaces: Cannon Hill Anglican College Project

14
Jul

CAD & LAYOUT SUPPORT

- **Request CAD / Revit files** for this seating model.
- **Layout support:** row spacing, aisles, sightlines and egress.
- **Tender pack help:** product data, finishes and specification notes.

Request Auditorium Layout Assistance

AUDITORIUM SEATING OPTIONS

Add-ons that improve wayfinding and seat identification in low-light rooms.

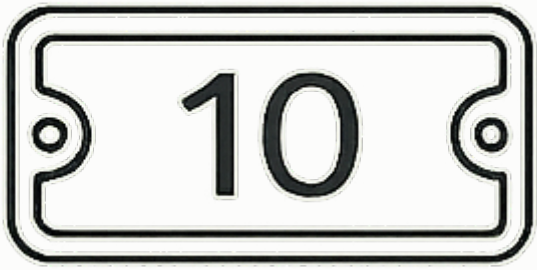

Seat numbering

Row and seat ID for fast wayfinding in auditoriums and lecture theatres.

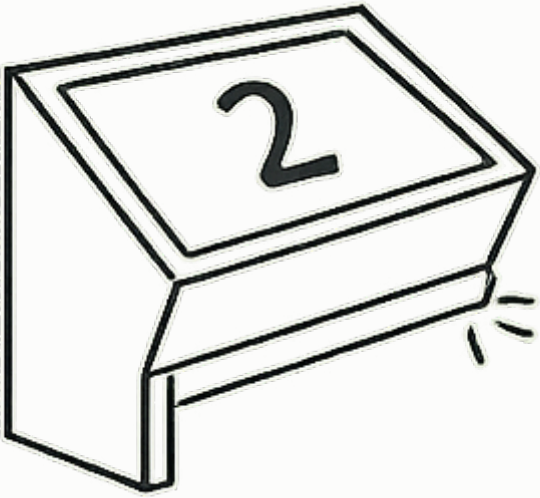

Aisle numbering + light

Clear aisle guidance and safer access in low-light rooms.

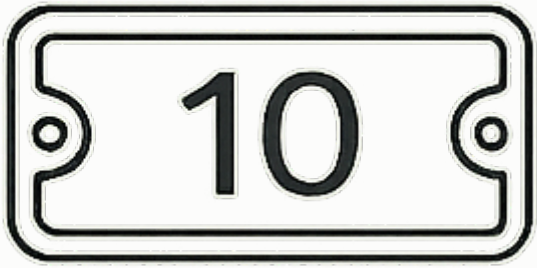

Row markers

End-of-row markers for bay identification.

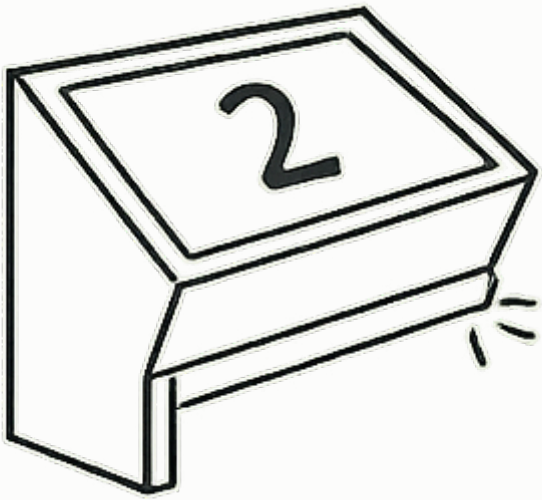

Aisle edge lighting

Low-glare guidance lighting along aisle edges.

AUDITORIUM & LECTURE THEATRE SEATING AUSTRALIA

FORMLINE supplies **auditorium seating** and **lecture theatre seating** for education, performance and public venues across Australia. Our range includes fixed seating systems, optional wayfinding accessories and upholstery support for long-term use.

For broader public space solutions, view our airport & public seating systems and beam seating. If you are specifying education interiors, explore our theatre & auditorium seating range.

Need a quotation or drawings? Share your layout, row count and preferred finishes via our contact page and we'll respond with lead time, data sheets and specification support.

EXPLORE RELATED PUBLIC SEATING RANGES

- **Theatre & auditorium seating** – fixed lecture chairs, acoustic options and venue-ready accessories.
- **Beam seating** – high-traffic public seating for terminals and waiting areas.
- **Airport & public seating systems** – engineered solutions for transport hubs and civic spaces.

FAQS

Can I specify my own fabric?

Yes. You can specify your own commercial upholstery or select from our recommended fabric ranges. You can also request samples.

What is the typical lead time?

Lead time is typically 12 weeks depending on fabric selection, quantity and project timing.

Do you provide CAD files and layout help?

Yes. We can supply CAD / Revit files and assist with layout optimisation for row spacing, aisles, sightlines and access paths.

Do you service auditorium seating and provide re-upholstery?

Yes. We offer servicing support including inspections, parts replacement and re-upholstery to extend the life of seating in high-use venues.

BRAND

Zaneti

Zaneti is an Italian furniture brand celebrated for its craftsmanship, refined design, and enduring quality. The brand specialises in chairs, tables, bases, and bespoke pieces, with a strong focus on aluminium outdoor furniture designed for both residential and commercial use.

Each collection reflects Italian design sensibility — combining elegance, proportion, and durability. Using premium materials such as aluminium, steel, and timber, Zaneti creates furniture that brings warmth and character to cafés, hotels, workplaces, and public spaces.

Hospitality Furniture Concepts offers the full Zaneti range in Australia, helping designers and operators furnish interiors and outdoor areas with timeless, design-led pieces built to last.

ZANETI

The latest on offer from Australian design studio, Zaneti. The brand specialised in designing chairs, tables, bases and bespoke pieces. They are specifically known for their work with aluminium outdoor furniture. Zaneti chairs and bases inject style and personality into any room. Made from an assortment of materials including quality wood, steel and aluminium they’re the perfect pieces to freshen up an interior.